MOTOVARIO® 에이전트
HEART OF MOTION

REDUCER SPEC	
MODEL	NMRV 030
SERVICE FACTOR	2.1
RATIO	30
OUTPUT [rpm]	55.7
OUTPUT TORQUE [Nm]	10
WEIGHT [kg]	1.2

MOTOR SPEC	
MODEL	TA/56B4-220/380V
POWER [kW]	0.09
POLE, PHASE	4P, 3PHASE
INPUT [rpm]	1670
BRAKE	NO
WEIGHT [kg]	3.6

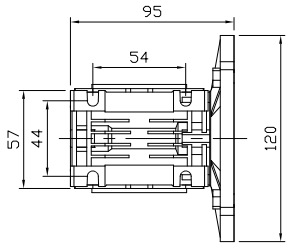

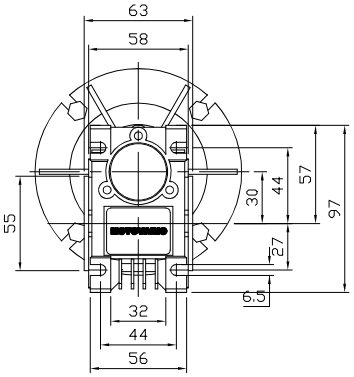

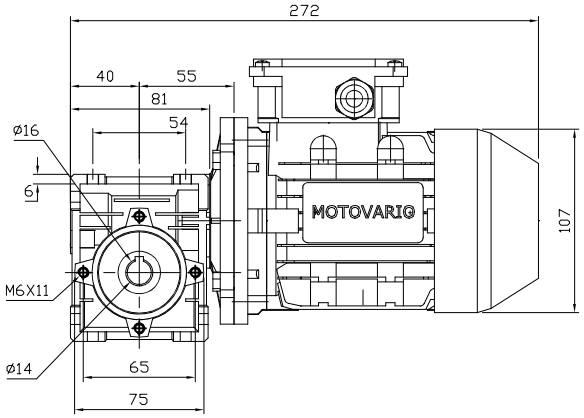

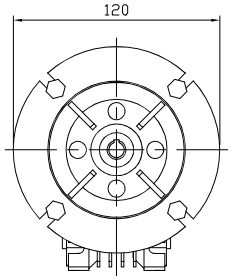

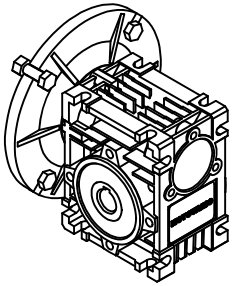

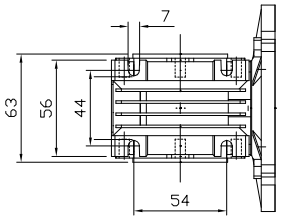

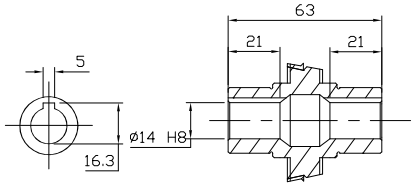

OUTPUT HOLLOW SHAFT

(주)한국체인모터
Tel. 032-815-8888 Fax. 815-8020
www.hcmfa.com

PROJECT		MOTOVARIO					
DRAWN	SEO Y.S	DATE		REV	A	SCALE	1:1
CHECKED	KIM J.S	DATE		UNIT	MM	PAGE	-
APPROVED	LEE J.Y	DATE					