ABR090 - 003 - S2 - P2 / MITSUBISHI HG-KR73

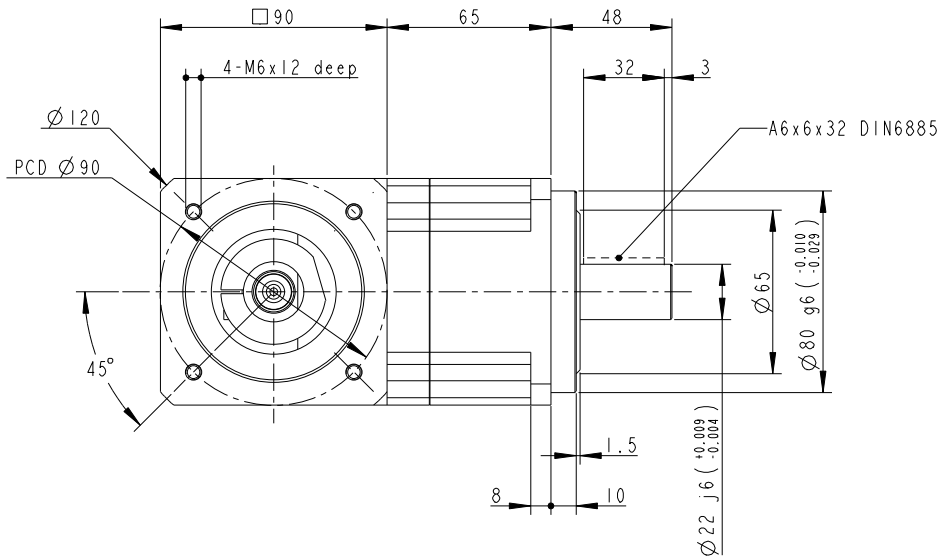

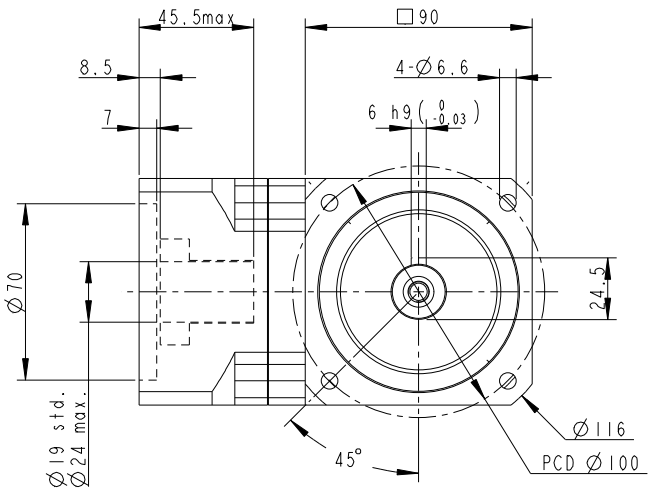

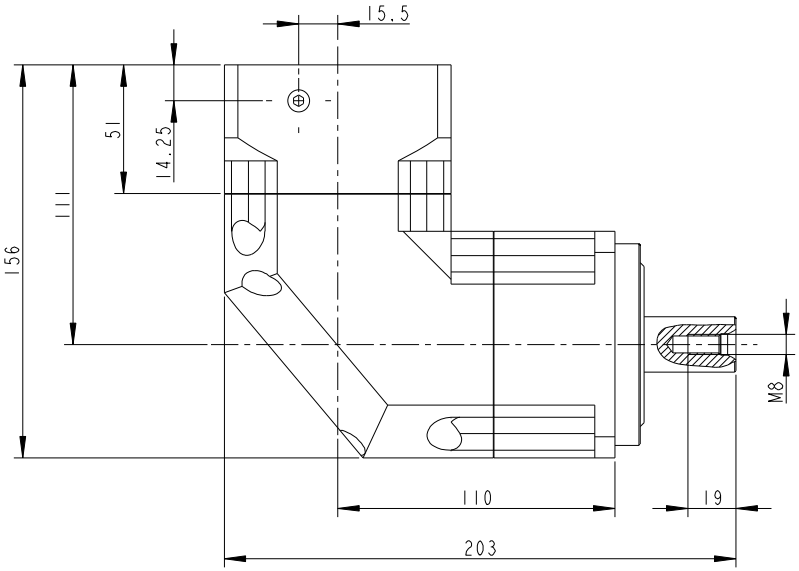

INERTIA: 1.87~2.25 kg-cm^2
MASS: 6.4 Kg

SHAFT OPTION S1: SMOOTH OUTPUT SHAFT(STANDARD)
SHAFT OPTION S2: OUTPUT SHAFT WITH KEYWAY
MICRO BACKLASH <= 2 arcmin
REDUCED BACKLASH<= 4 arcmin
STANDARD BACKLASH<= 6 arcmin

***BUSHING SUPPLIED WHEN MOTOR SHAFT DIAMETER SMALL THAN Ø24

Old Part No. ABR0901-P4030105

PART NO. ABR0901-P0401300305 ABR090-1, AD-W90-M90-5		APEX DYNAMICS, INC.
APPROVALS	DATE	TITLE: ABR090 1 STAGE, RATIO= 3~20 AND MOTOR FLANGE MOUNTING
DRAWN 江淑惠		DWG NO. ABR0901-P0401300305
CHECKED		
APPROVED		SIZE A1 / SCALE 1:1 / REV 2.0