PA II 142 - 003 - S2 / MITSUBISHI HG-SR502

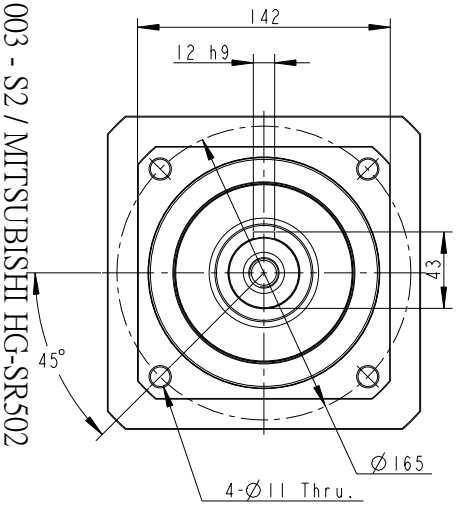

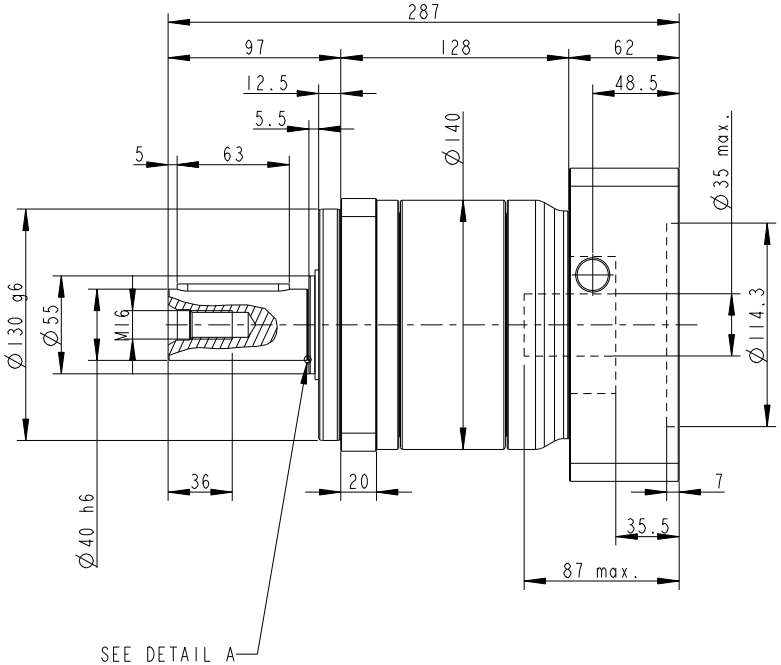

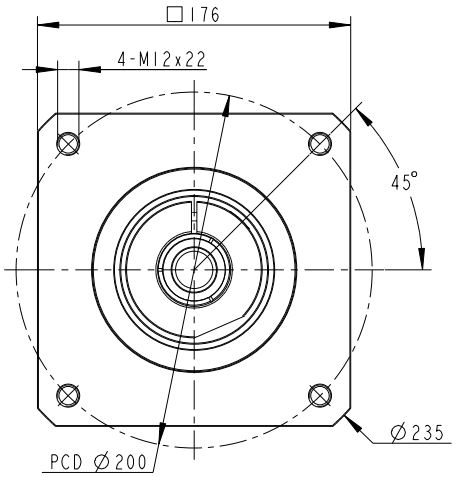

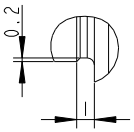

DETAIL A
SCALE 10:1

INERTIA: 8.5 ~ 10.74 kg-cm^2
MASS: 12.9 Kg

PART NO. PA2-142_1ST_35-P0411800501 AD-PE2-S35-M176-1		APEX DYNAMICS, INC.
APPROVALS	DATE	TITLE PA2-142_1 Stage_S35 , RATIO= 3~10 AND MOTOR FLANGE MOUNTING
DRAWN 沈正義		DWG NO. PA2-142_1ST_35-P0411800501
CHECKED		
APPROVED		SIZE A0 / SCALE 1:1 / REV